Parts List			
Item	Qty	Part Number	Material
1	1	FT90R	PET Plastic
2	1	UNI EN ISO 7045 - M2 x 4 - H Steel 4.6 Plain	Steel 4.6, Plain
3	2	CRPHTS ASME B18.6.5M - M2.5x0.45 x 8 - D - I Steel Grade 2 Plain	Steel Grade 2, Plain
4	1	Disc Servo Attachment	Nylon 6

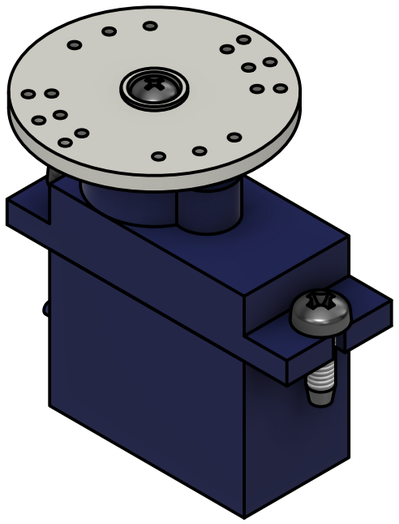

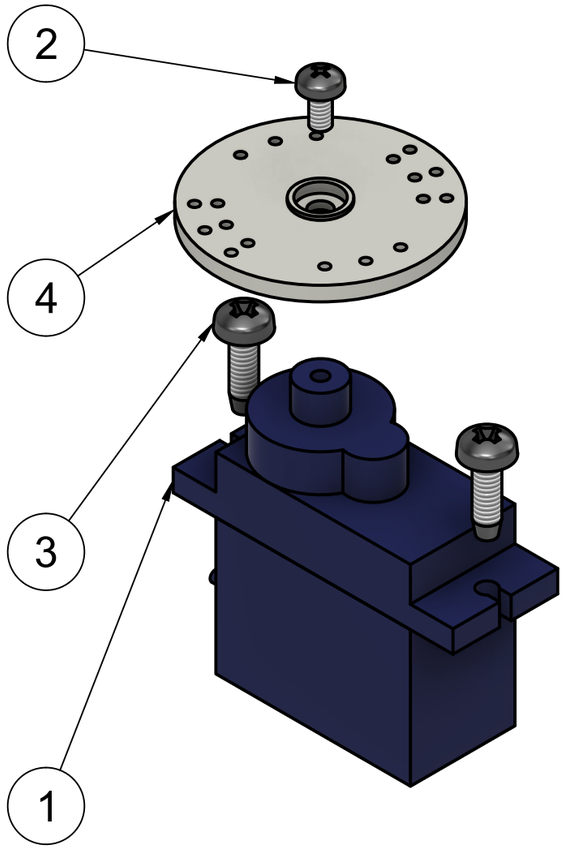

Dept.	Technical reference	Created by Armaan Krishnar 2026-03-13	Approved by
		Document type	Document status
		Title FT90R (Disc)	DWG No.
			Rev. / Date of issue / Sheet 1/1